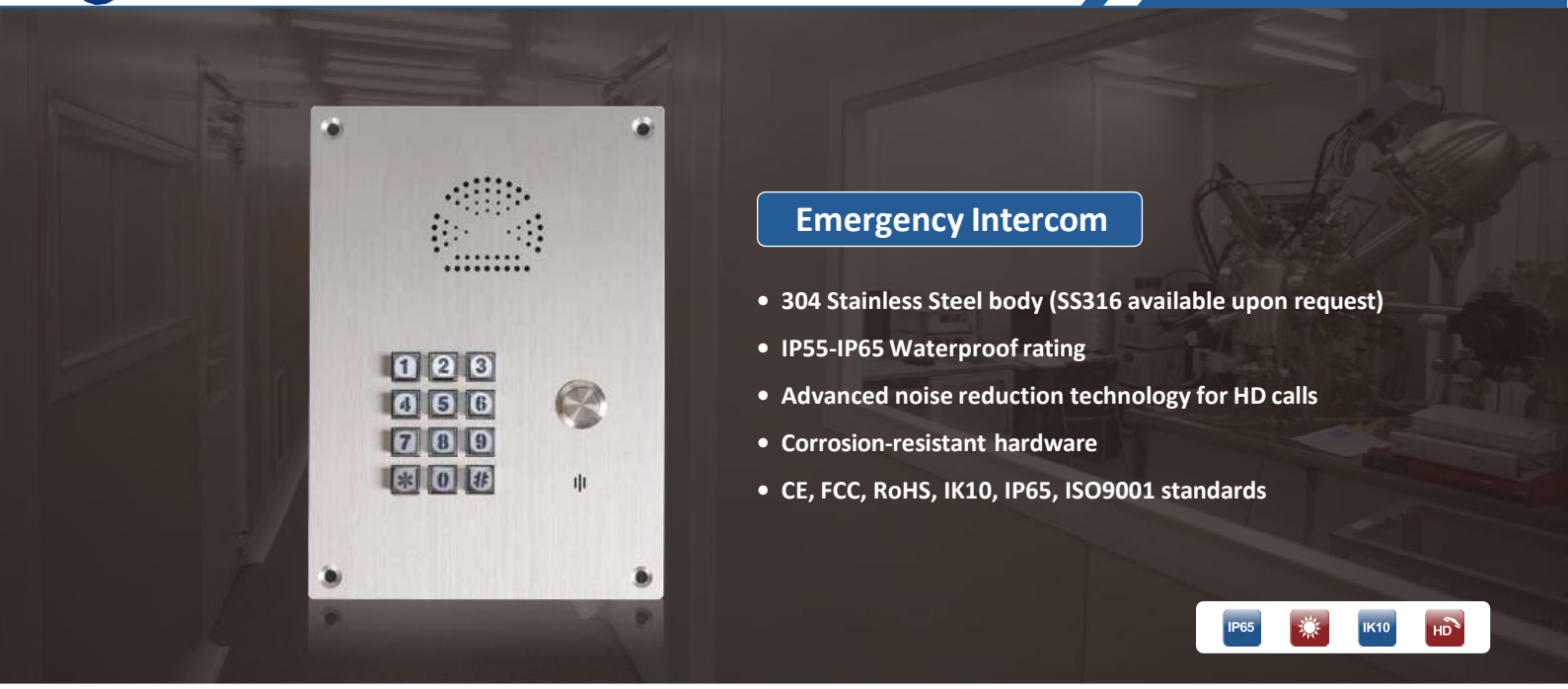

Emergency Intercom

- **304 Stainless Steel body (SS316 available upon request)**
- **IP55-IP65 Waterproof rating**
- **Advanced noise reduction technology for HD calls**
- **Corrosion-resistant hardware**
- **CE, FCC, RoHS, IK10, IP65, ISO9001 standards**

MAIN FEATURES

Housed in stainless steel with a wire-drawing finish and manufactured to high standards, these telephones offer enhanced resistance to vandalism and ensure reliable communication at all times.

Additionally, this series of phones has been tested in salt spray and is highly durable in humid and corrosive environments. Extremely easy to install, the cable entrance is located at the back of the phone to prevent artificial damage.

Ideal for parking lots, lifts/elevators, hotels, doorways, railway/metro platforms, hospitals, police stations, ATMs, stadiums, and outdoor building etc.

- Hands-free operation with a single vandal-resistant metal button for emergency calls
- Full metal keypad (12keys)
- Noise-cancelling microphone
- Built-in 2W speaker
- Flush mounted design with tamper-proof screws
- The IP protection rating is IP55; IP65 is available upon request.

TECHNICAL SPECIFICATIONS

Analog Specification	
Power supply	Drawn from telephone line
Operating voltage	24 VDC to 65 VDC
Operating current	20 mA DC to 100 mA DC
Ringer operating voltage	48 VAC to 90 VAC (calling frequency 21 to 54 Hz)
Ringing volume	80 dB (A) @ 1 meter
Dialing method	PD or DTMF mode can be set via the menu. DTMF mode in accordance with ITU-T recommendation Q.23
Lightning / Transients	Protection to ITU-T K.21 enhanced levels
Programming	It can be programmed remotely via DTMF tones or the keypad
Technical Specifications	
Compatible with all the standard PABX systems	
Remote programming allows you to manage your network from a central location	
Programmable auto hang-up timer	
Supports scheduled dialing to the central control phone to detect whether the phone is working properly	
Supports one relay to remotely control external devices	
Can be adapted according to the model of the Analog PABX to support the sequential calling function	
Phone line powered	
Operating temperature -40˚C to 65˚C / Storage temperature -40°C to 75°C	
M.T.B.F. exceeds 50,000 hours under normal operating conditions	

OPTIONAL ACCESSORIES

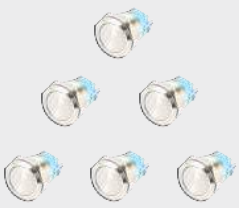

Button
Multiple Options Available



JR-LP-02
LED Beacon Light



JR-HSA-10/20/25/30/35
Broadcast Horn

APPLICATIONS

1 Analog telephone connects to the PABX and call outside lines through the PSTN.

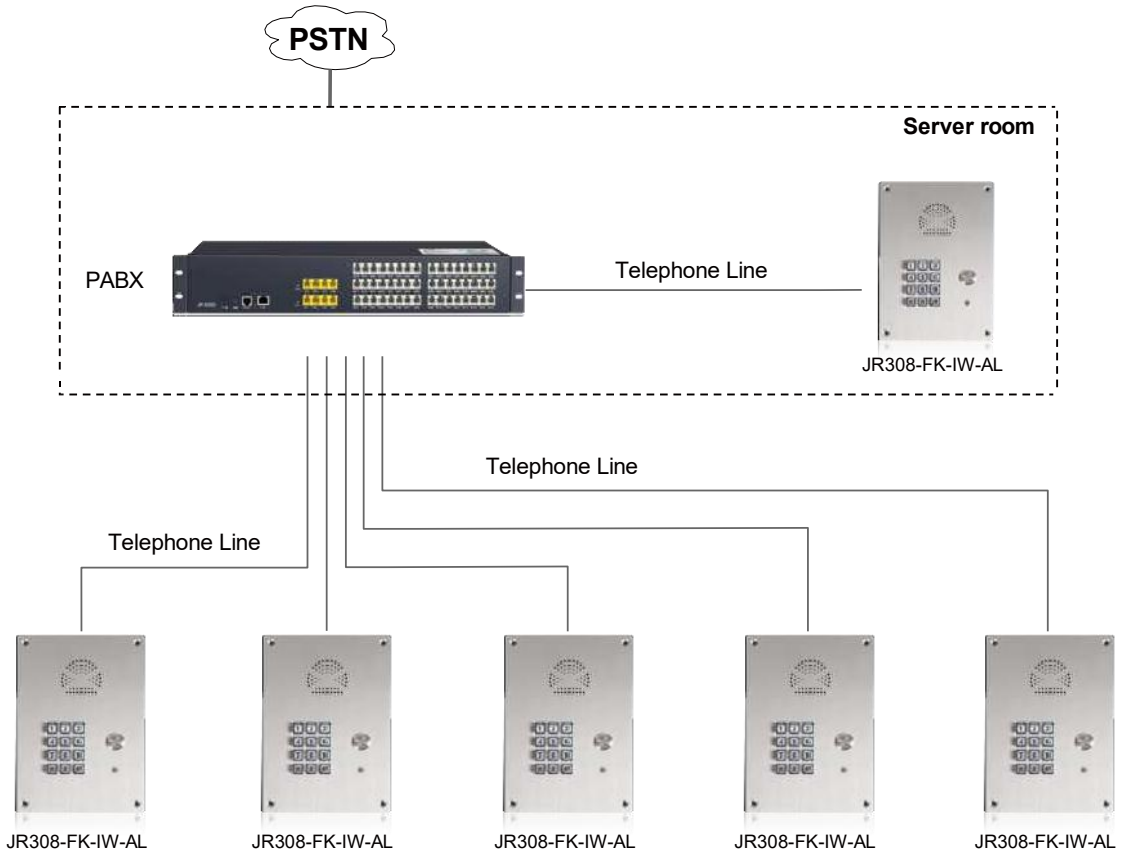

2 Analog telephone connects to voice gateway, converts analog signal to SIP signal, and is applied in SIP-based systems.

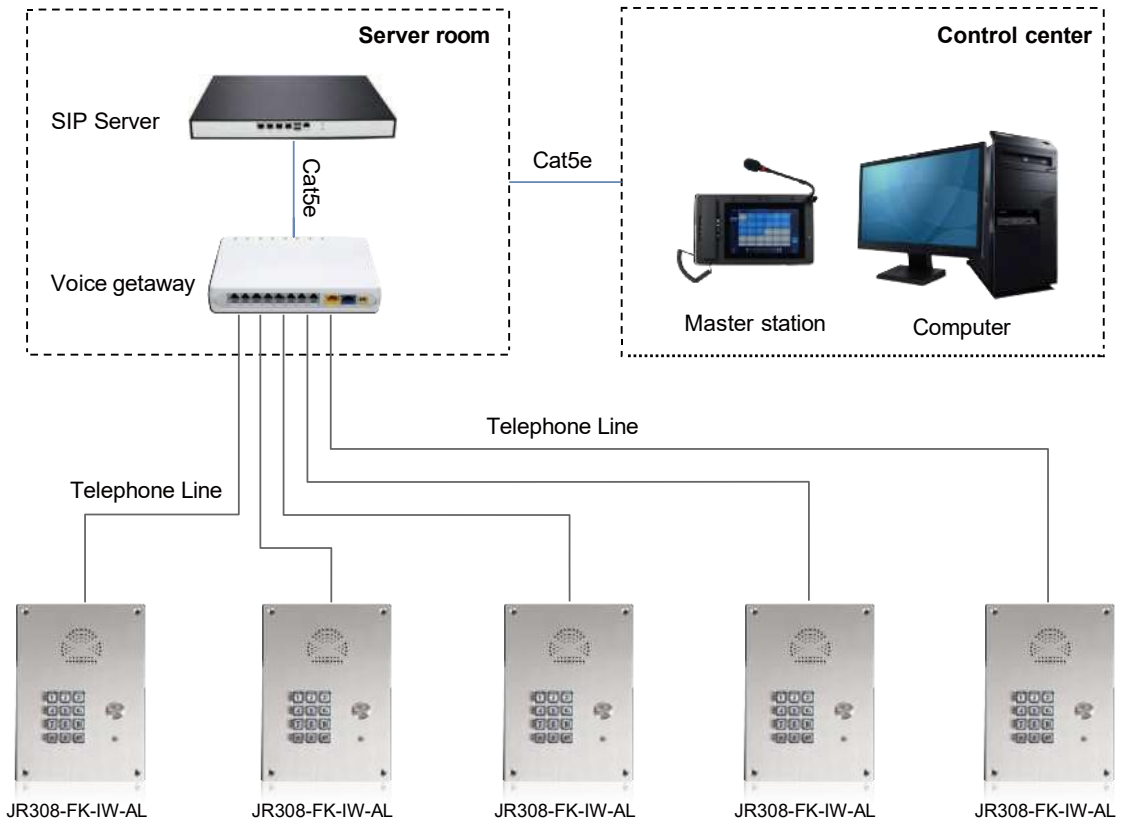

APPLICATION SCENARIOS


Metro


Airport


Platform


Elevator


Clean room



Hospital



Bank


School

DIMENSIONS

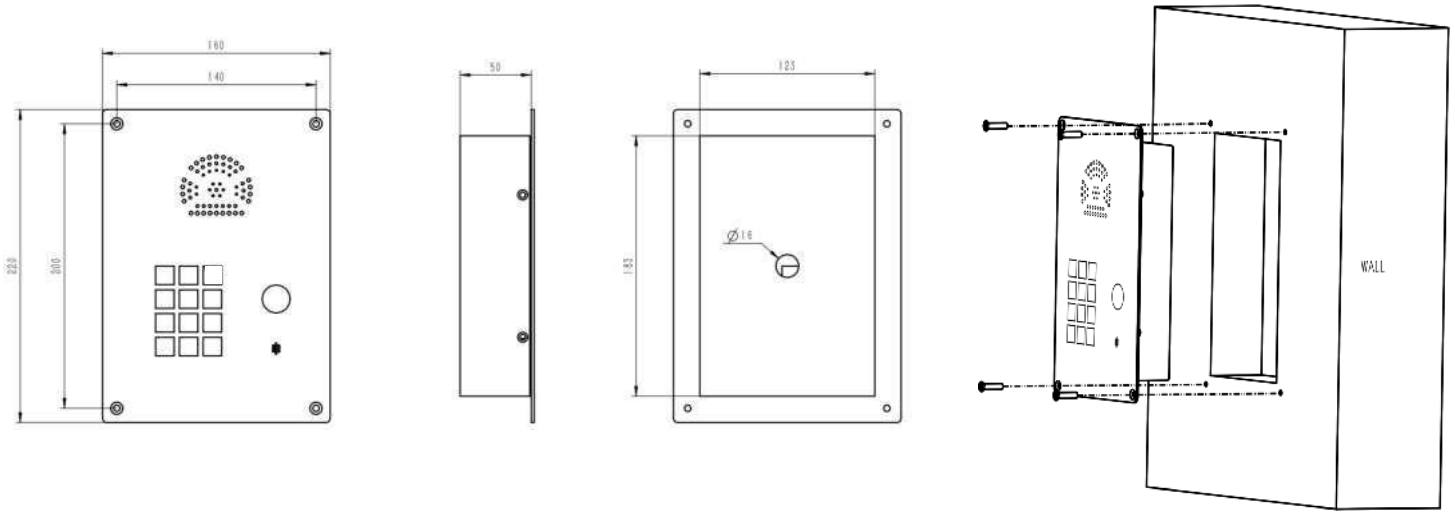

Package	
Unit size	220*160*50 (mm)
Shipping dimensions	250*180*80 (mm)
Packaging materials	Foam padding, carton
Weight	Gross weight: 2 kg / Net weight: 1.8 kg

Add: 6/F, A1, Xingyi industrial city, Baishixia Est., Fuyong, Bao'an, Shenzhen, China
Email: sales@jrteck.com
Tel: +86 - 755 - 27322952
Web: www.jrteck.com